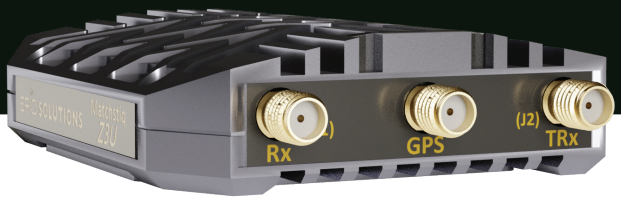

Matchstiq™ Z3u

Next Generation Low SWaP Fully Integrated Software - Defined Radio (SDR) Platform

RADICALLY SMALL, INDUSTRIAL - GRADE RF SIGNAL PROCESSING PLATFORM

REDUCE RISK AND ACCELERATE DEVELOPMENT OF MISSION CRITICAL RF TRANSCEIVER SOLUTIONS

The Matchstiq Z3u is a field-ready, complete software-defined radio (SDR) platform designed to deliver a fully integrated RF transceiver plus signal processing solution in the smallest possible form factor. Measuring just 3.64" x 2.74" x 0.75" and weighing 5.6 ounces, the Matchstiq Z3u is ideal for on-the-go signal processing applications. An integrated magnetic mount allows the platform to attach to a cell phone or other portable device, deriving power and providing communications through a single USB-C port. As a completely stand-alone platform, Matchstiq Z3u can execute signal processing applications locally on the AMD® Zynq® Ultrascale+ System on Chip (SoC), or interface to a host platform over USB 3.0 to execute applications on the host.

KEY HIGHLIGHTS

- Supports 2-Channel Phase Coherent Rx Mode, or 1Tx + 1Rx Independent Mode
- 10 MHz + PPS inputs
- GPS Disciplined Oscillator
- AMD® Zynq® Ultrascale+ SoC (XCZU3EG)
- 128 GB eMMC + microSD Card Slot
- USB 3.0 OTG Interface
- Tested to a Subset of MIL-STD-810H

BLOCK DIAGRAM

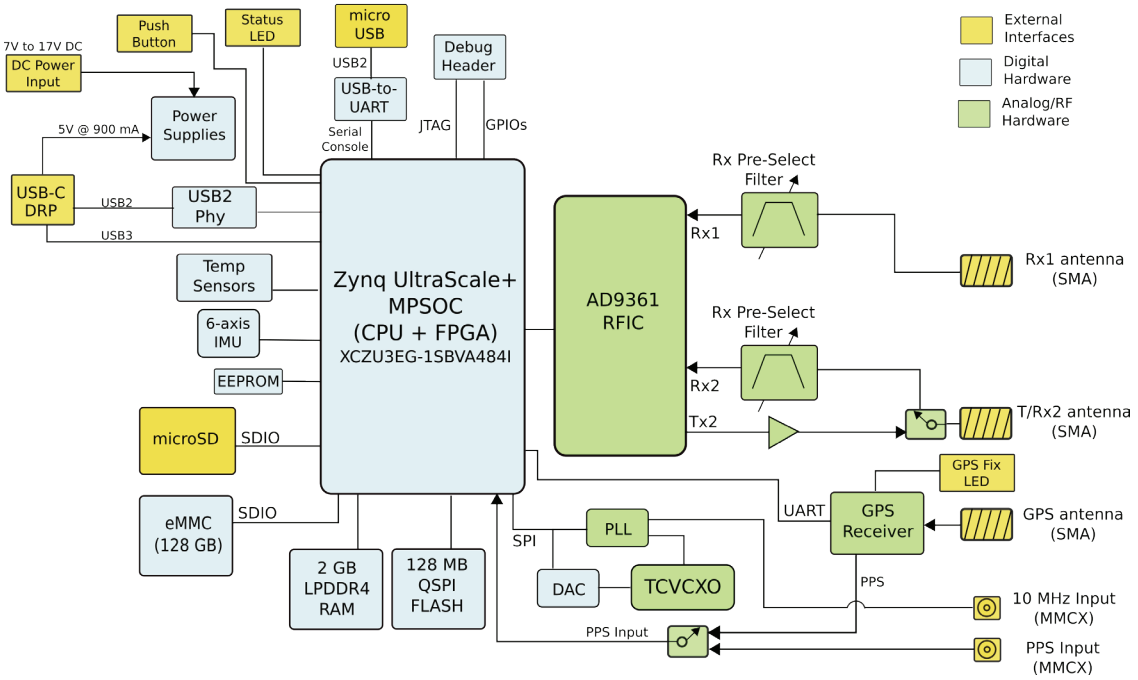

PHYSICAL SPECIFICATION

DIMENSIONS
- 3.64" x 2.74" x 0.75"

WEIGHT
- 5.6 oz

POWER
- < 4.5 W
- Power via USB-C connector or DC barrel jack (7-17 V)

ENVIRONMENTAL TESTING
- Tested to a subset of MIL-STD-810H including temperature (operating, storage, shock), mechanical shock and vibration. Contact the factory for more details.

DIGITAL SPECIFICATION

SYSTEM-ON-CHIP (SOC)
- AMD® Zynq® Ultrascale+ XCZU3EG
- Quad-core ARM Cortex A53 CPU (64-bit)
- 154K logic cells
- 7.6 Mbits block RAM
- 360 DSP slices

RAM
- 2 GB LPDDR4 SDRAM

NON-VOLATILE STORAGE
- 128 GB eMMC + microSD card slot

OPERATING SYSTEM
- Linux (Ubuntu 20.04)

USB INTERFACE
- USB 3.0 OTG via USB-C

GPIO
- Access via I/O header

SERIAL CONSOLE ACCESS
- Console available via microUSB

ACCELEROMETER
- 6-axis IMU

JTAG
- Access via I/O header

GPS RECEIVER SPECIFICATION

GPS MODULE
- Origin Spider ORG4033

NUMBER OF CHANNELS
- 99 search channels, 33 simultaneous tracking channels

COLD START
- < 31 seconds

SENSITIVITY WHILE TRACKING
- - 165 dBm

TYPICAL PPS ACCURACY
- 30 nS

RF SPECIFICATION

FLEXIBLE RF FRONT END SUPPORTS VARIABLE OPERATING MODES
- 2-channel phase coherent Rx, or 1Tx + 1Rx

RF TUNING RANGE
- 70 MHz to 6 GHz (RF access to 45 MHz)

RF CHANNEL BANDWIDTH
- 200 kHz up to 56 MHz

TYPICAL RX NOISE FIGURE
- < 8 dB

TYPICAL RX IIP3
- > -10 dBm

RX PRE-SELECT FILTERS
- Flexible bandpass filter from 50 MHz to 6 GHz on both Rx channels

TX AND RX SAMPLE RATE RANGE
- 233 Ksamples/sec - 61.44 Msamples/sec

A/D AND D/A CONVERTER SAMPLE WIDTH
- 12-bits

RX GAIN RANGE
- 0-76 dB

TX GAIN RANGE
- 0-89 dB

TYPICAL TX OUTPUT POWER
- +13 dBm below 2 GHz and +10 dBm above 2 GHz

Specifications subject to change without notice.
Epiq Solutions is a business dedicated to advancing RF technology through products designed and manufactured in the U.S.A.
Epiq Solutions exports its products strictly in accordance with all US Export Control laws and regulations which shall apply to any purchase or order.

Rev 1.3 23rd December 2025

epiqsolutions.com
sales@epiqsolutions.com
847 598 0218

3740 Industrial Ave,
Rolling Meadows, IL 60008