NDR888

8 Channel, 18 GHz High Performance Rackmount Tuner

The NDR888 is a wide band, 8 channel, microwave tuner platform that provides frequency coverage from 20 MHz to 18 GHz. Each channel provides a 1 GHz analog IF output with a 500 MHz instantaneous bandwidth. The 8 channels can tune both independently and phase coherently. It employs a super-heterodyne RF conversion architecture to minimize spurious products and yield high dynamic range performance. The fully integrated synthesizers provide fast tuning, low phase noise and the tuning flexibility to choose an alternative IF output center frequency (an IF different than 1 GHz) if desired. The unit includes an internal 100 MHz OCXO and accepts a 10 MHz reference input.

The NDR888 uses a standard 1U height, 19" rack and has a total power consumption or less than 140 Watts (18 Watts per channel). Interfacing on the back panel include easily accessed SMAs and Ethernet ports. The NDR888 is controlled via a pair of 1/10G Ethernet interfaces, each controlling 4 channels. The digital architecture is based on the Xilinx Zynq SoC.

Key Features

- 8 Channel Microwave Tuner Platform
- 20 MHz to 18 GHz RF Coverage
- 500 MHz Bandwidth Per Channel
- Independent and Phase Coherent Tuning
- 1 GHz Analog IF Output
- Ethernet Command and Control
- 140 W Power Consumption

Applications

- ELINT
- DF
- Satcom
- Test & Measurement

Specifications at a Glance

Category	Output	F_{Min}	F_{Max}	LO Tuning	Timing Inputs	CPU Enabled	GPU Enabled
Rack-mount	Analog	20 MHz	18 GHz	Indep. & Phase Coherent	10 MHz	No	No

Max Rx Channels	Max Tx Channels	IBW_{Max}	$SFDR_{Typ.}$	Weight	Typ. Power Consumption	Interfaces	ADC bits/ DAC bits
8	0	500 MHz	90 dB	17 lb. 7.7 kg	140 W	Ethernet	NA

Specifications

Environmental Specifications	
Temperature (operating)	-40 to +70 °C (rail)
Temperature (Storage)	-50 to +100 °C (rail)
Size	Standard 1U 19 inch rackmount.
Weight	17 lb./ 7.7 kg
Supply Voltage	85-250 VAC, 47-400 Hz Latching front panel switch.
Power Consumption (Typ.)	140 W
Vibration	Suitable for airborne
Humidity	5% to 95% non-condensing
Digital Specifications	
FPGA	Xilinx Zynq SoC
CPU	Not user-accessible
Digital Interfaces	Two independent rear-panel 1 GbE interfaces, each controlling a block of 4 channels. Two independent front panel USB ports providing virtual serial connections to each block of 4 channels. Used for initial network configuration and field updating of software and firmware.
Write Protection	Latching front panel switch enables/ disables protection for both 4 channel groups simultaneously.
Other	
Export Classification	5A991.b
CE-Marked	No

RF Specifications	
All	
Connector Types	SMA
Frequency Range	20 MHz to 18 GHz
IF Output Center Frequency	1 GHz
Channel Bandwidth	500 MHz per channel
Tuning Operation	8 channels, supporting combinations of independent and phase coherent channels including multiple sets of coherent channels. See diagram on opposite page.
Tuning Speed	100 µs (optional 50 µs)[1]
Receivers	
Channels	8 (4 optional)
Noise Figure (Typ.)	15 dB
Input in-band IIP3 (Typ.)	+2 dBm[2]
Spurious Free Dynamic Range (Typ.)	90 dB
Gain Control Range	40 dB in 1 dB steps
A/D Bits	NA
Transmitters	
Channels	None
Clocking	
Internal Reference	100 MHz
Stability	+/- 0.1 ppm over 0 to +50 °C
Reference Input	10 MHz
PPS Input	None
GPS Input	None

[1] Measured from receipt of command to within 1 kHz of final frequency

[2] Referenced to RF Input and measured at maximum gain with both test tones within the final IF passband

Data subject to change without notice.

NDR888 Block Diagram

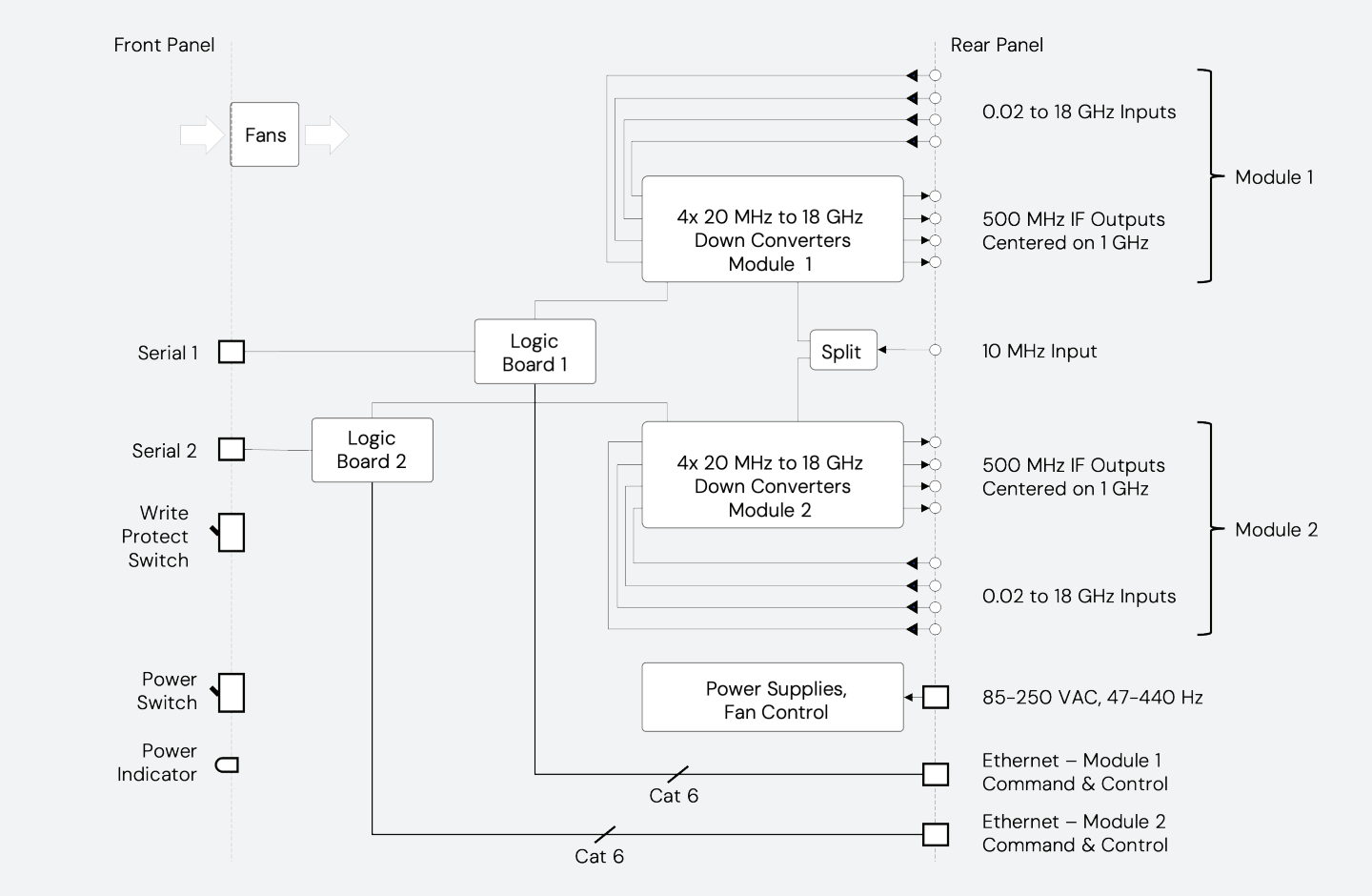

Tuning Examples

The NDR888 has independent channels that are combinable into phase coherent groups for applications such as direction finding (DF). Illustrations of some examples are given below.

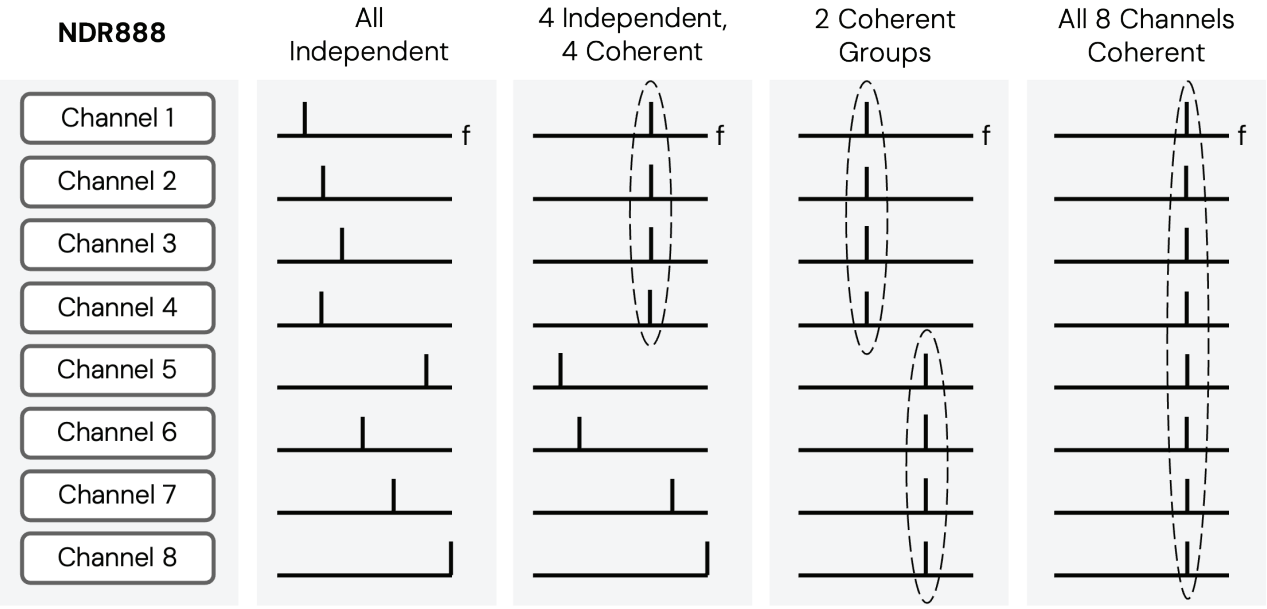

Physical Views

Power Input (Fused, filtered)

Ethernet Control, Module 2

Ethernet Control, Module 1

Module 2 RF: Upper – Outputs Lower – Inputs

10 MHz Clock Input

Module 1 RF: Upper – Outputs Lower – Inputs

Companion Products

NDR504 - Add 40 GHz to Your System

The NDR504 4-channel down converter module was designed to pair with a phase-coherent platform such as the NDR888, with two down converters easily feeding one tuner. The converter is crazy-small, rugged, and designed to fly and ideal for direction-finding and geolocation applications. Outputs below 18 GHz.

NDR505 - RF Distribution Made Easy

The NDR505 switches and signal-conditions up to 5 sets of 4 channels with select inputs capable of operation up to 18 GHz. It outputs 4 coherent channels that are suitable for a tuner such as the NDR888 or one of the many SDRs in Epiq's product range.

High Performance Applications

Performance means different things in different situations, driving different trade-offs in product design. For some applications, the highest performance comes from optimizing low size, weight and power in design above all other parameters to allow spectrum awareness on the smallest platforms. In others, outright RF performance might be the priority. The table below illustrates some common scenarios with typical differentiating characteristics; Epiq provides solutions for these and many others, even up in space.

Metric	High Performance Platforms	Low SWaP Platforms
Key Use Case	Long Range & High Standoff Linearity Dominated Applications 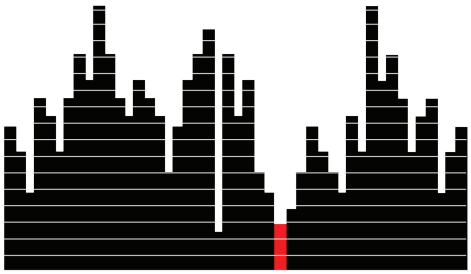	Short Range & Tactical Noise Dominated Applications 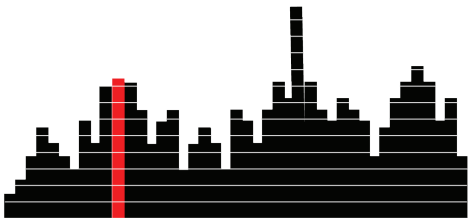
RF Environment	Very Congested Multiple Strong Signals In & Out of Band	Targeted Signal Set
SWaP vs Performance	Performance Dominated	SWaP Dominated
SDR Integrated Processing	Large FPGAs and CPUs Multiple Parallel Channelizers	Defined by Available SWaP
Domains	Airborne/ Maritime/ Land	Dismounted/ Unmanned/ Attritable
Example Standard Form Factors	1U Rack Mounted, 3U VPX 	M.2, VNX+, Mod Payload 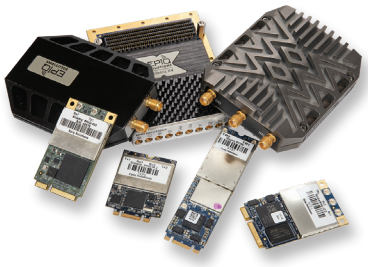

Example Tuners from Epiq

The tables below show some examples of the Epiq portfolio, with the full range available in the comparison table here.

Product	**NDR888**	**NDR585**
Description	High Performance 18 GHz Rackmount Tuner	High Performance 3U VPX 18 GHz Tuner
Output	RF	
Max Channels Rx/ Tx	8/ 0	4/ 0
Frequency Range	20 MHz - 18 GHz	
IBW Max	500 MHz, centered on 1 GHz IF	
SFDR Typ.	90 dB	
CPU?	-	
GPU?	-	
Typ. Power Consumption	140 W	48 W
Interface e.g.	Ethernet (Control)	

Maximum number of Rx, Tx channels, often not simultaneously. SFDR = Spurious Free Dynamic Range. IBW = Instantaneous Bandwidth. Interface example, often others present also.

The Epiq Family of Products

Specifications subject to change without notice.

Epiq Solutions exports its products strictly in accordance with all US Export Control laws and regulations which shall apply to any purchase or order.

ABOUT EPIQ

Epiq Solutions develops high performance tools for engineering teams and government-focused organizations requiring situational awareness and detailed insight into their RF environments in order to identify and act against wireless threats.

15th September, 2026

www.epiqsolutions.com
sales@epiqSolutions.com
+1 847 598 0218

3740 Industrial Ave,
Rolling Meadows, IL 60008, USA
© 2026