VNX+ Development Platform

GPU-Enabled, 4 Channel, Low-SWaP 6 GHz SDR in a VITA 90 Form Factor

The VNX+ Development Platform accelerates demonstration and development of a complete self-contained RF payload capable of hosting AI/ML applications out of the box.

VNX+, ratified in February 2026 in the VITA 90 standard, is a new standard for low SWaP, modular open architecture platforms. Epiq has partnered with AntaraTek to produce the VNX+ Development Platform, offering a complete VITA 90-based ecosystem comprised of a chassis, backplane, power supply module, Nvidia based SBC, and the new VNX400 SDR module.

Conceptually, it takes the elements of an Epiq Matchstiq G40 and enables them as SOSA®-aligned VNX+ modules. This forms a complete SDR system including four independent or phase-aligned 6 GHz channels, an open FPGA architecture, CPU/ GPU processing and storage along with connectivity and chassis management functions. The VNX+ development system has everything needed to kickstart RF application development in a VITA 90 environment.

Product Web Page:

VITA and VNX+ are trademarks of VITA. SOSA® is a registered trademark of The Open Group in the United States and other countries

Key Features

- Complete VITA 90 RF development system
- Four independent or phase coherent 6 GHz channels suitable for survey, DF, and transmit applications
- Equipped with RF pre-selection filtering
- Integrated signal processing with Nvidia Orin NX and AMD Artix7 FPGAs
- Compatible with DeepSig's OmniSIG and 3dB Labs's Sceptre
- Open architecture, driven by Epiq's Libsidekiq control library

Specifications at a Glance

Category	Output	F_{Min}	F_{Max}	Frequency Tuning	Timing Inputs	CPU Enabled	GPU Enabled
SOSA/ CMOSS	Digital	10 MHz	6 GHz	Indep. & Coherent	100 MHz REFCLK, AUXCLK	Yes	Yes

Max Rx Channels	Max Tx Channels	IBW_{Max}	$SFDR_{Typ.}$	Weight	Typ. Power Consumption	Interfaces	ADC bits/ DAC bits
4	4	50 MHz	75 dB	5.5 lb. 2.5 kg	40 W	Ethernet etc.	16/16

System Specifications

Model:	VNX+ Development Platform
Environmental Specifications	
Temperature (operating)	-40 to +70 °C, cold plate surface temperature under typical operating conditions
Temperature (Storage)	-40 to +85 °C
Size	5.5 x 5 x 3.5 inches 140 x 130 x 90 mm
Weight	5.5 lb. 2.5 kg
Power (Typ.)	40 W
Supply Voltage Input Range	16 - 36 V_{DC}
Digital Specifications	
FPGA[1]	Two AMD Xilinx Artix XC7A50Ts, one per NV100 SDR
CPU/ GPU	Jetson Orin NX 16 GB Ampere GPU + Arm Cortex-A78AE CPU + 16 GB LPDDR5
NVMe SSD	256 GB (Jetson module operating system and user storage space)
User I/O	USB 3.2 to Jetson module (USB-A) USB 2.0 to SDR module (USB-A) microUSB Maintenance port 1 GbE network connection to Orin NX DisplayPort to Jetson module
Other	
Export Classification	5A991.b
CE-Marked	No

Model:	VNX+ Development Platform
RF Specifications	
All	
Connector Types	SMA Female
Frequency Range	10 MHz to 6 GHz
Channel Bandwidth	50 MHz each
Tuning Operation	See table on next page.
Receivers	
Channels	4
Noise Figure (Typ.)	<5 dB
IIP3 (Typ.)	+2 dBm
Max RF Inpout Level Without Damage	+20 dBm
Spurious Free Dynamic Range (Typ.)	75 dB
A/D Bits	16
RF Full Scale Input (at Max Gain)	• -25 dBm on (TRx1A) and -18 dBm on (TRx2A), frequency dependent • -25 dBm on (TRx1B) and -18 dBm on (TRx2B), frequency dependent
Transmitters	
Channels	4
Max Output Power	+5 dBm
D/A Bits	16
Clocking	
Reference	REFCLK, 100 MHz
PPS Input	Yes, AUXCLK
GPS Input	Yes

Specifications stated for the system as a whole

Data subject to change without notice.

System Specifications

RF Modes	
Receive:	
Single channel Rx	Yes
Two channel phase coherent Rx	Yes
Four channel phase coherent Rx	Yes
Two channel independently tunable Rx	Yes
Four channel independently tunable Rx	Yes
Transmit:	
Single channel Tx	Yes
Two channel phase coherent Tx	Yes
Four channel phase coherent Tx	Yes
Two channel independently tunable Tx	Yes
Four channel independently tunable Tx	Yes
Transceive:	
1Tx + 1Rx (FDD, on different antenna ports)	Yes
1Tx + 1Rx (TDD, on the same antenna port)	Yes
1Tx + 1Rx (TDD, on different antenna ports)	Yes
2Tx + 2Rx (FDD, on different antenna ports)	Yes
2Tx + 2Rx (TDD, on the same antenna ports)	Yes
2Tx + 2Rx (TDD, on different antenna ports)	Yes
Fast -Frequency Hopping (FFH) Receive:	
Single channel Rx	Yes
Two channel Rx	Yes
Four channel Rx	Yes
Two channel phase coherent Rx	*Yes*[1]
Four channel phase coherent Rx	*Yes*[1]
Fast -Frequency Hopping (FFH) Transmit:	
Single channel Tx	Yes
Two channel Tx	Yes
Four channel Tx	Yes
Two channel phase coherent Tx	*Yes*[1]
Four channel phase coherent Tx	*Yes*[1]

[1] *Future support*

Chassis rear view showing modules. Note the Wedgelock retainers. Thermal management is facilitated through the clamshell enclosure via conduction to the chassis.

SBC and power supply cards from AntaraTek

VNX+ Development Platform Block Diagram

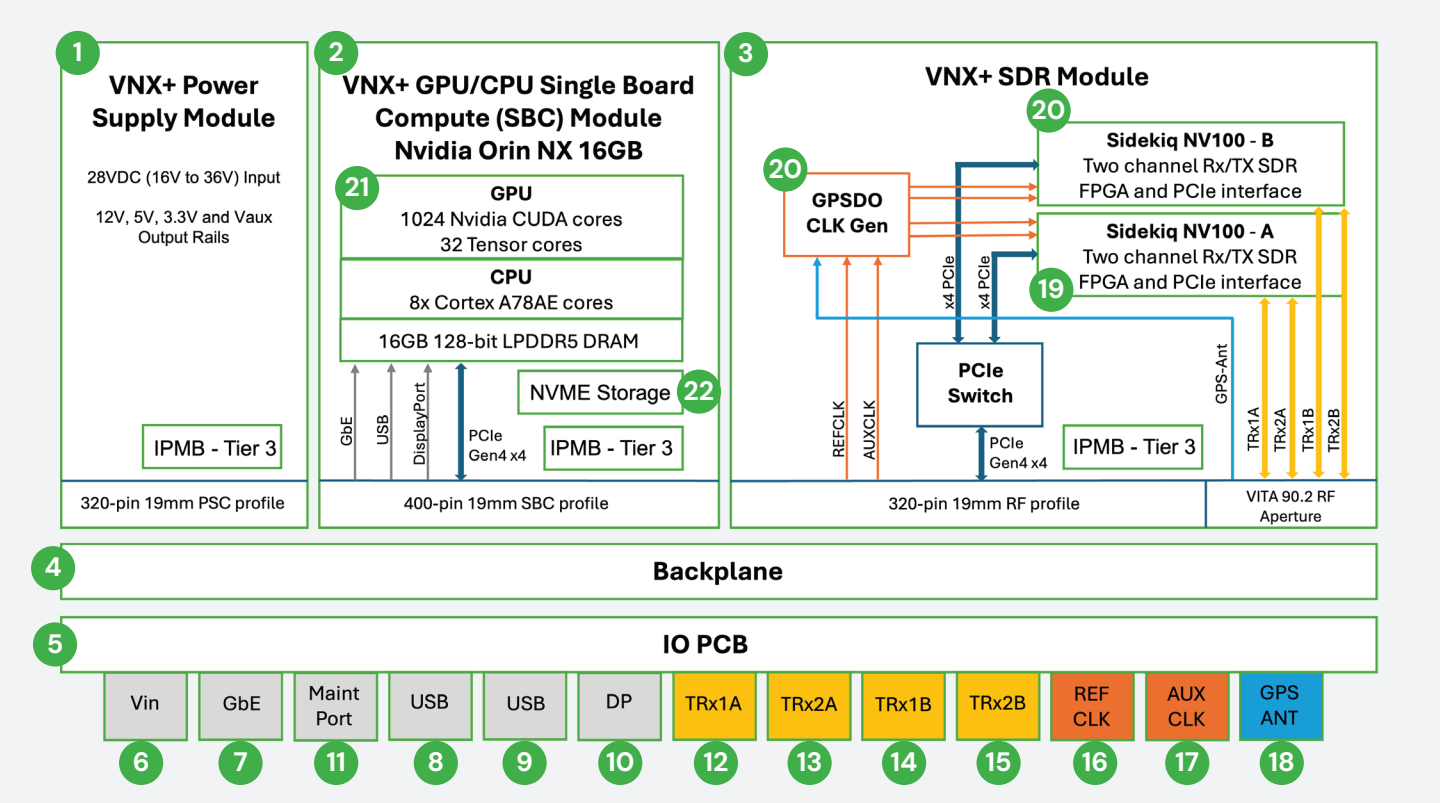

Features of Note

Numbered items may be highlighted on the block diagram and/or exploded view.

1. AntaraTek VITA 90.4 power supply module
2. AntaraTek VITA 90.4 single board computer (SBC)
3. Epiq VNX400 VITA 90.4 SDR module
4. AntaraTek VNX+ backplane
5. Development system interface PCB
6. System power connector, compatible with the Epiq X40
7. Ethernet network connection (RJ45)
8. USB-A to Jetson Module
9. USB-A to SDR Module
10. DisplayPort (mini DisplayPort connector)
11. Maintenance port (USB Micro-B)*
12. TRx1A RF interface (SMA)
13. TRx2A RF interface (SMA)
14. TRx1B RF interface (SMA)
15. TRx2B RF interface (SMA)
16. 100 MHz REFCLK (SMA)
17. AUXCLK (1 PPS) (SMA)
18. GPS Antenna Connection (SMA)
19. 20 2x NV100 6 GHz SDRs
21. Nvidia Orin NX System-on-Module
22. 1 TB NVMe Jetson OS and user storage
23. VITA 90 3-slot chassis*

* Visible on exploded view only

Anatomy of a VNX+ Platform

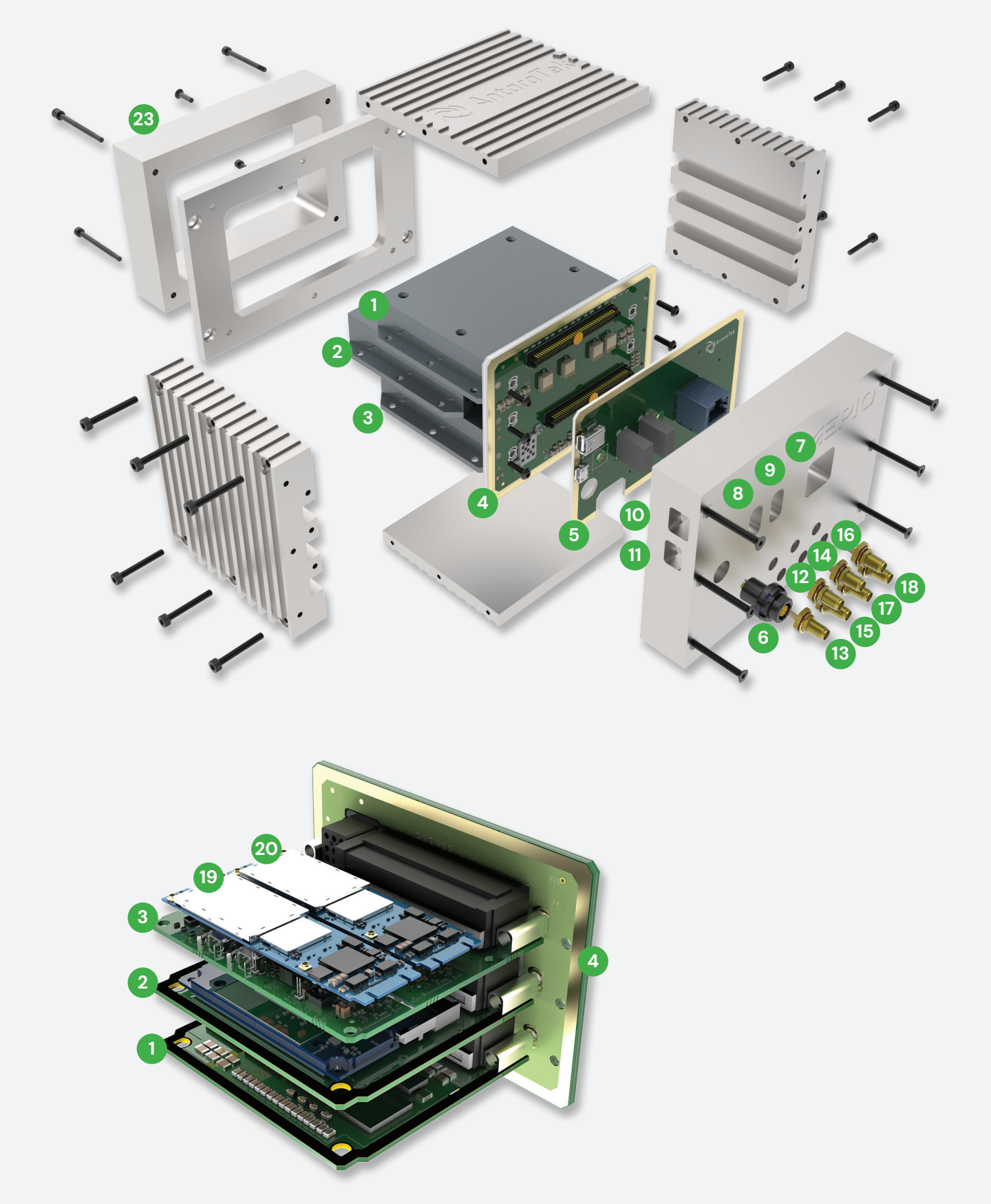

VNX+ Development Platform Features

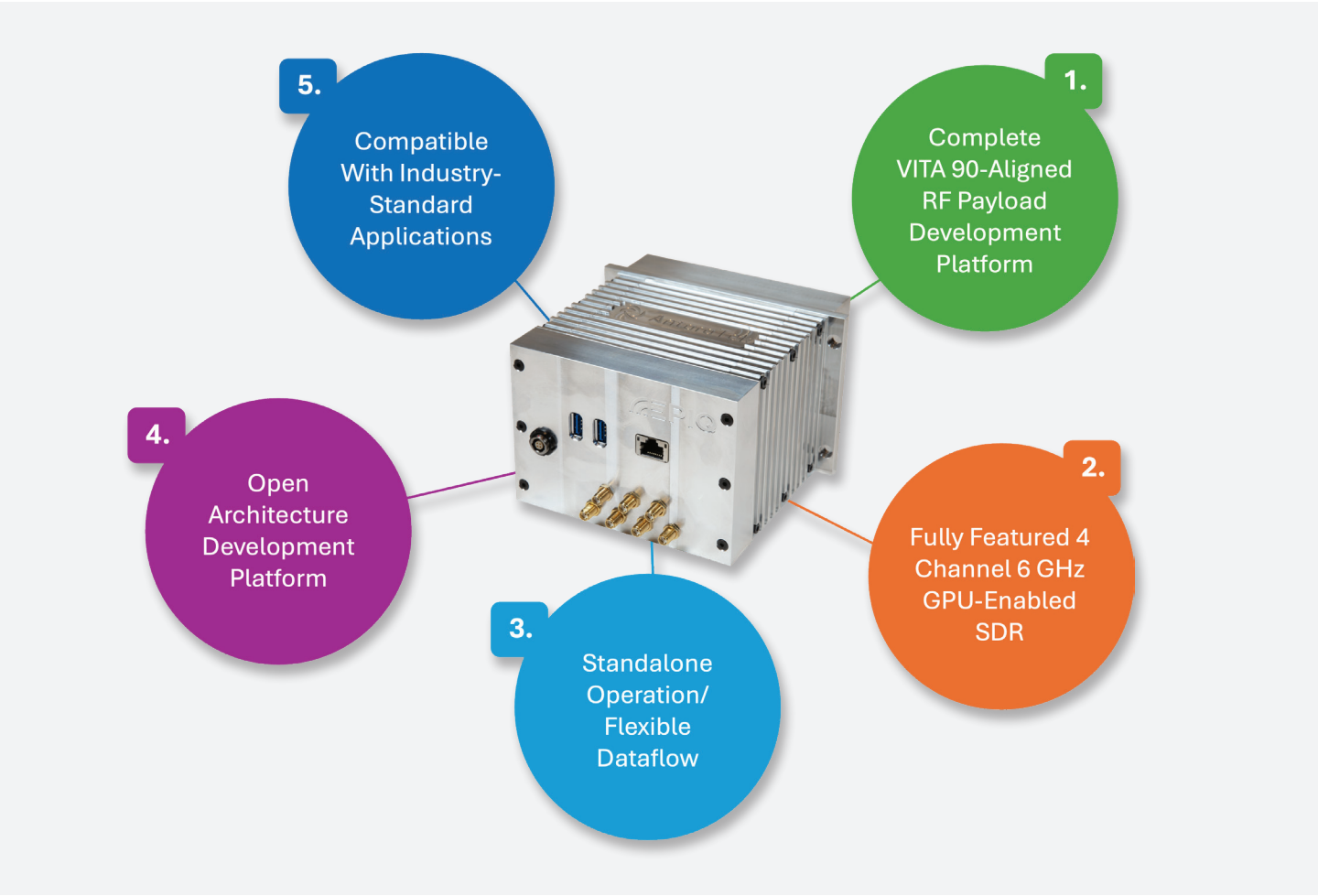

Complete VITA 90 RF System Development Platform

1.

The system is new, but the foundations are not. The two AntaraTek modules are in production and already shipping to customers, while the core of the VNX400 SDR module is two NV100 SDRs that are firmly established in the marketplace and relied upon worldwide. Each is SOSA-aligned and available separately

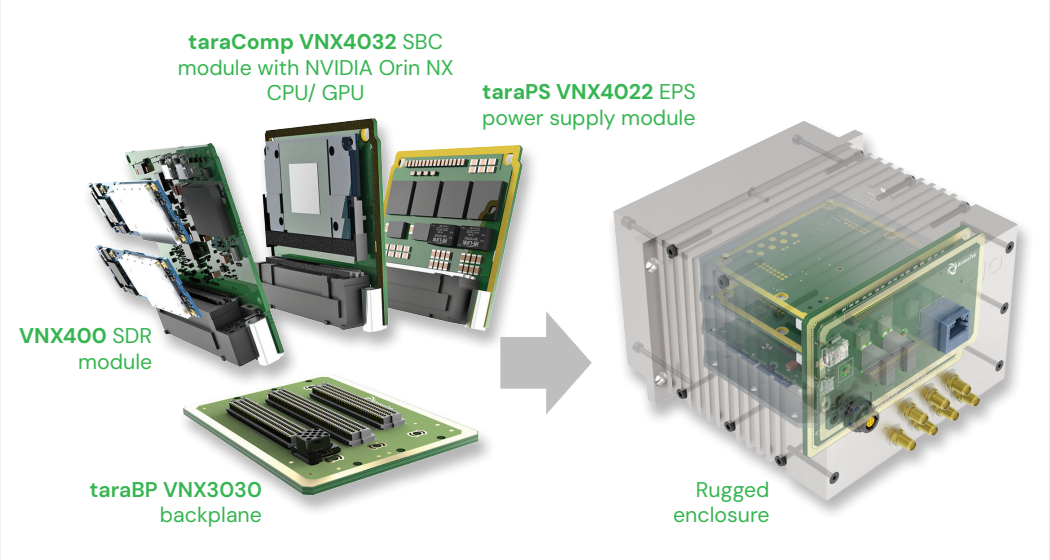

Full Featured, 4-Channel, 6 GHz GPU-Enabled SDR System

2.

The VNX400 is the heart of the RF system. Each M.2 2280 form-factor NV100 includes pre-selection filtering, 16-bit analog-to-digital conversion, and an open Artix-7 XC7A50T FPGA. Together, the paired radios provide four Rx/Tx channels, each supporting 50 MHz of bandwidth and tunable up to 6 GHz. The open FPGA architecture supports custom FPGA processing and waveform development, while fast frequency hopping enables agile mission sets across dynamic RF environments. The highly configurable Tx/Rx front end supports flexible deployment options and can be configured for up to four independent tunable LOs or four coherent Tx/Rx channels.

Diagrams on the next page show:

- The high degree of channel flexibility available to suit common user applications.
- Each front end also contains additional switching to provide antenna flexibility.

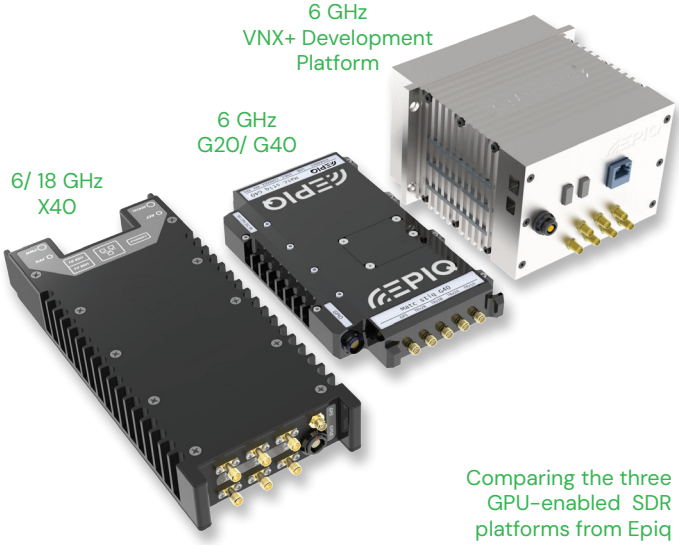

Comparing the three GPU-enabled SDR platforms from Epiq

Illustration of frequency hopping transmit and receive channels with the benefit of 4 independent LOs and a hop speed of less than 1 ms.

The VNX400 houses two M.2 2280 form factor SDRs while also providing a PCIe switch, management functions and clock distribution.

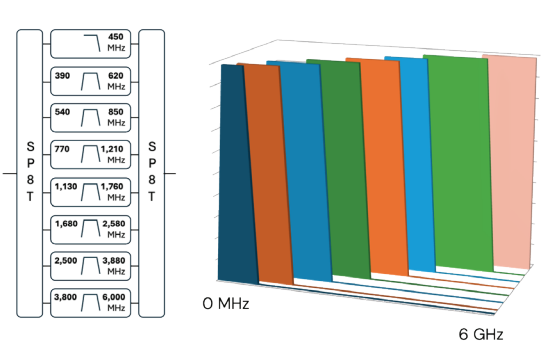

Preselection filtering block diagram and visualization of NV100 pre-selection bands; slopes are not representative of actual filter roll-offs.

Flexible tuning modes available from the embedded NV100s

Two antennas, two receivers

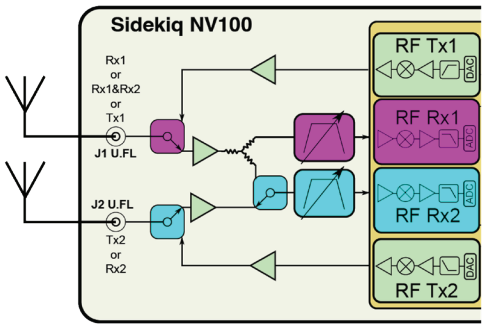

One antenna,, two receivers

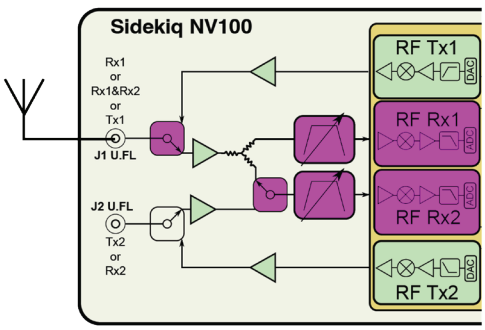

Each NV100 RF front end has an input switch allowing antenna sharing if desired

Standalone Operation, Flexible Data Flow

3.

Similar to its Matchstiq X40 and G20/G40 cousins, the VNX+ system is a ready-to-deploy set of sensing, power management, and data processing hardware. IQ data streams can be started, stopped, and coordinated with precision timestamps through libsidekiq, enabling a dynamic dataflow model across sensing, recording, processing, and transmit functions. Paired with the high-throughput PCIe backplane, the full RF bandwidth of the installed radios can be moved into the Jetson Orin NX for CPU and GPU processing, allowing the system to support real-time analytics, classification, and other accelerated compute workloads at the edge.

The architecture also supports truly heterogeneous compute. Advanced processing functions can be offloaded into the radio FPGA using the open FPGA reference design, enabling applications such as inline FFT processing, channelization of receive paths, and waveform playback or interpolation on transmit paths. Local SSD storage supports onboard capture for later offline exploitation, while also providing a source for arbitrary waveform playback, including coherent or independent playback across all four transmit channels.

As shown in the lower diagram, the system can also stream data off-board for downstream processing, whether by transmitting lower-bandwidth IQ data to a remote node or by exporting metadata and higher-level products generated by the Jetson Orin. Together, these capabilities allow VNX+ to support flexible edge processing workflows ranging from autonomous operation to distributed sensing and AI-assisted classification in real time.

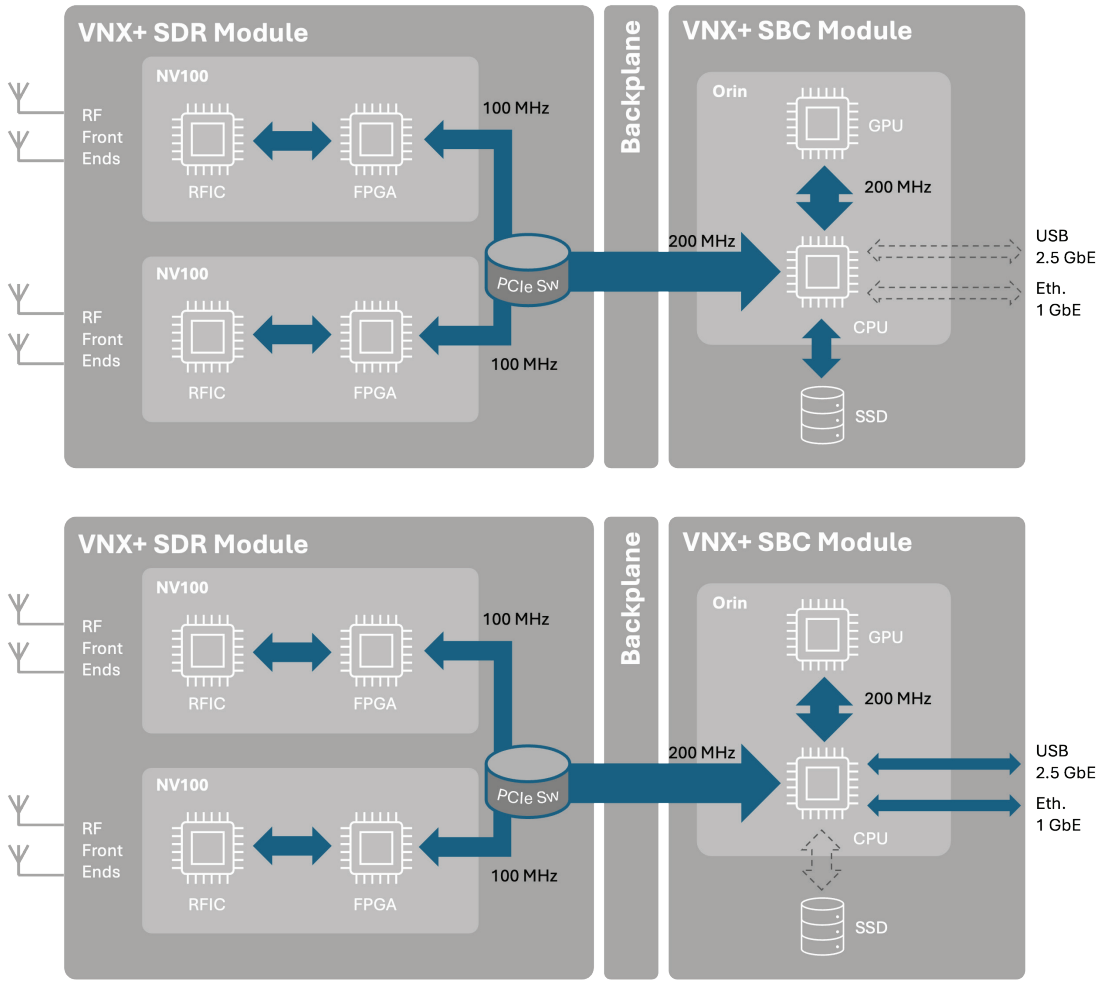

Open Architecture System

4.

At the core of VNX400 development platform is Libsidekiq, Epiq's proven software framework for controlling and scaling advanced SDR platforms. Used across generations of Epiq radios, Libsidekiq provides a consistent API that unifies RF front-end control, data conversion, precision timestamping, and transport into the Linux environment. Its efficient FPGA footprint preserves more than half of on die slice/bram/dsp blocks for customer-developed processing, while its Linux drivers and host API on the Orin NX enable a wide range of third-party and mission-specific applications to run directly at the edge.

For developers and integrators, the VNX400 development platform is designed to provide meaningful platform access rather than a closed processing pipeline. Customers receive full access to the FPGA RTL and Linux kernel driver source, enabling deep customization of datapath functions, hardware acceleration, and system integration. The Libsidekiq development offering also includes a runtime installer that explicitly supports redistribution by integrators, helping partners build, deploy, and sustain their own applications on top of the platform. The result is a system that combines a mature software foundation with the openness needed for custom waveforms, embedded processing, and mission-specific application development.

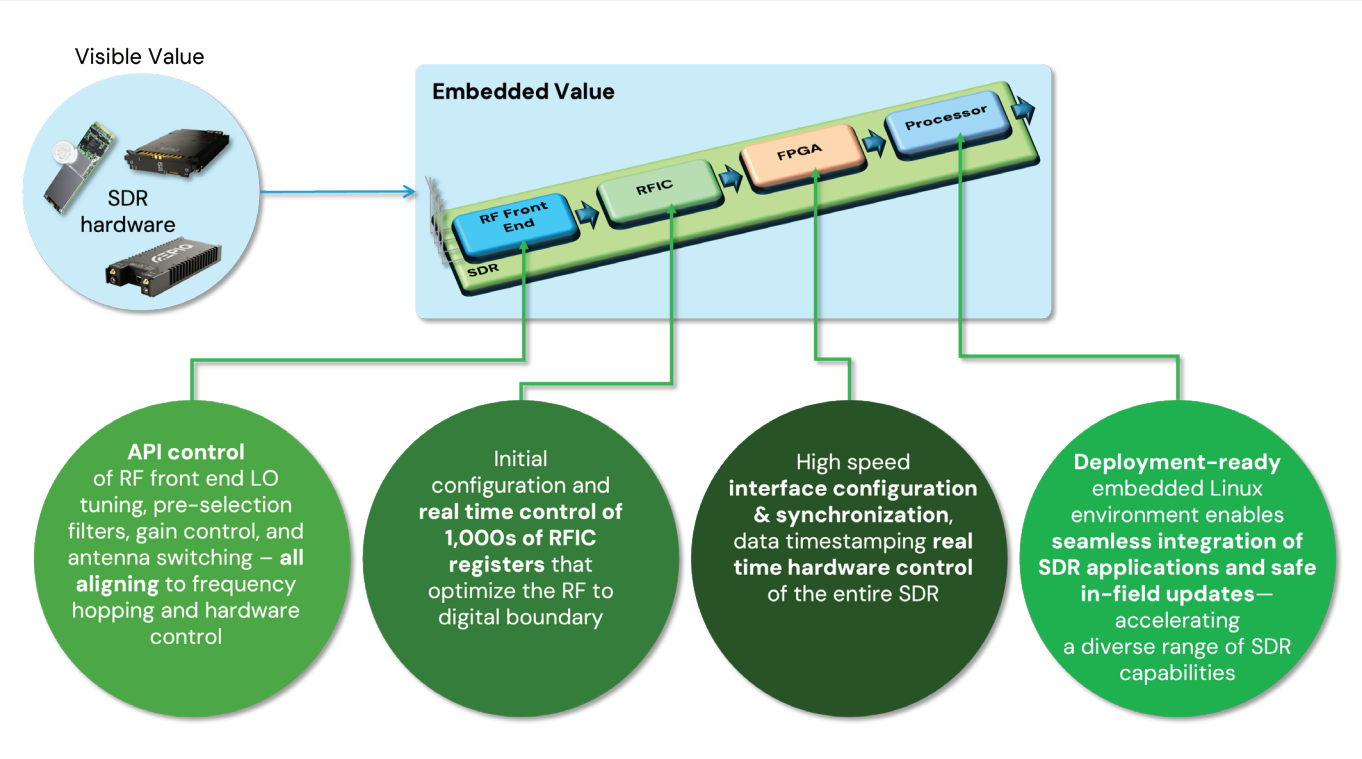

What you see is only a tiny part of the value. Epiq's BSP & API accelerate application development by tens of thousands of engineering hours by supplying a mature SDR platform with all advanced processing and real time subsystems debugged and provided. We did the work, so you don't have to.

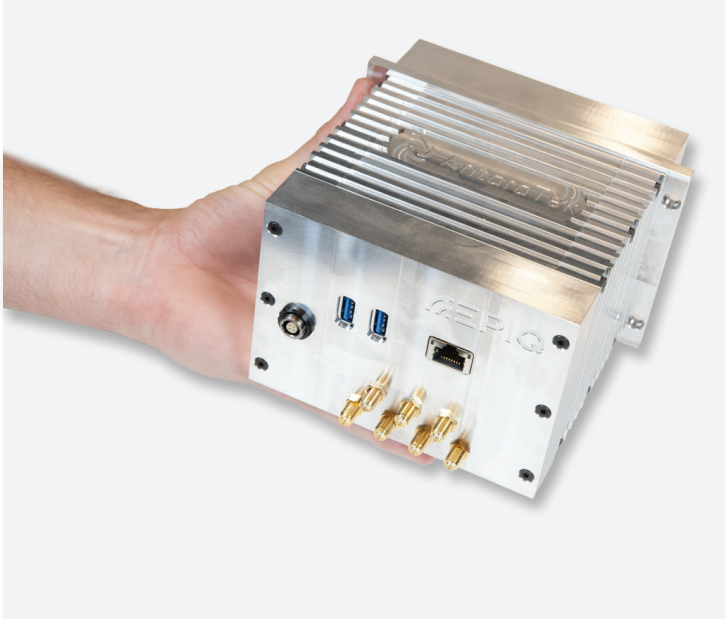

Capabilities

5.

The following partner applications have been tested with the VNX+ Development Platform, providing signal classification, direction finding and a wealth of other capabilities out of the box.

DEEPSIG OmniSIG

Next Generation RF Awareness

OmniSIG is a machine-learning (ML) software application that provides RF situational awareness to a wide range of radio systems. DeepSig's custom neural network provides real-time identification, classification, and localization of known and unknown RF signals, enables automated alerting and reaction, and open-standards based descriptions of signal activity.

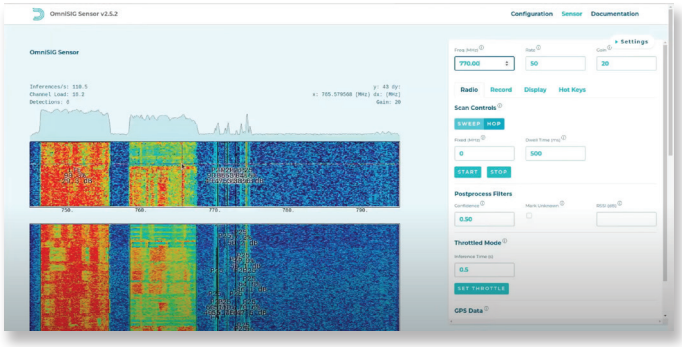

3dB LABS SCEPTRE

Reveal The Unknown

Quickly identify and locate anomalous signals across multiple domains.

Sceptre provides state of the art signal processing software built for real-time and offline spectrum and temporal analysis. Sceptre enables advanced signal discovery through remote spectrum operations, precision geolocation and multi-discipline analysis.

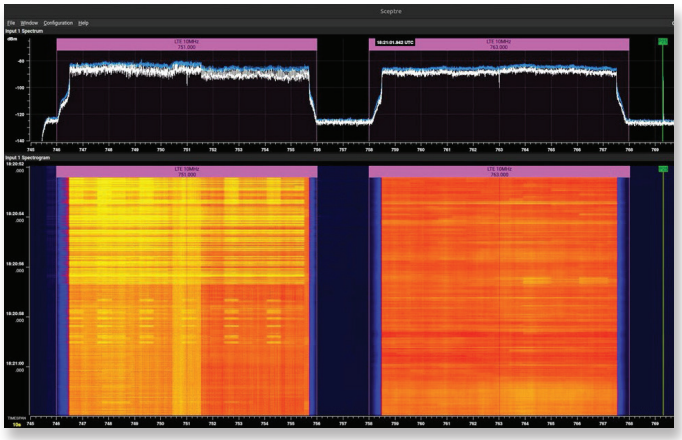

NVIDIA Jetson Orin NX

Jetson Software

The Jetson software stack begins with NVIDIA JetPack™ SDK, which provides Jetson Linux, developer tools, and CUDA-X accelerated libraries and other NVIDIA technologies.

JetPack enables end-to-end acceleration for your AI applications, with NVIDIA TensorRT and cuDNN for accelerated AI inferencing, CUDA for accelerated general computing, VPI for accelerated computer vision and image processing, Jetson Linux API's for accelerated multimedia, and libArgus and V4l2 for accelerated camera processing.

Deployment Examples

5" Tubes & Beyond

A VITA 90 RF payload system based on the Epiq G40 is a strong fit for constrained 5-inch tube platforms including decoys, and similar launched systems. Its compact architecture, integrated transmit and receive capability, and four-channel DF support enable sensing, classification, geolocation, and response functions in highly volume-limited payloads.

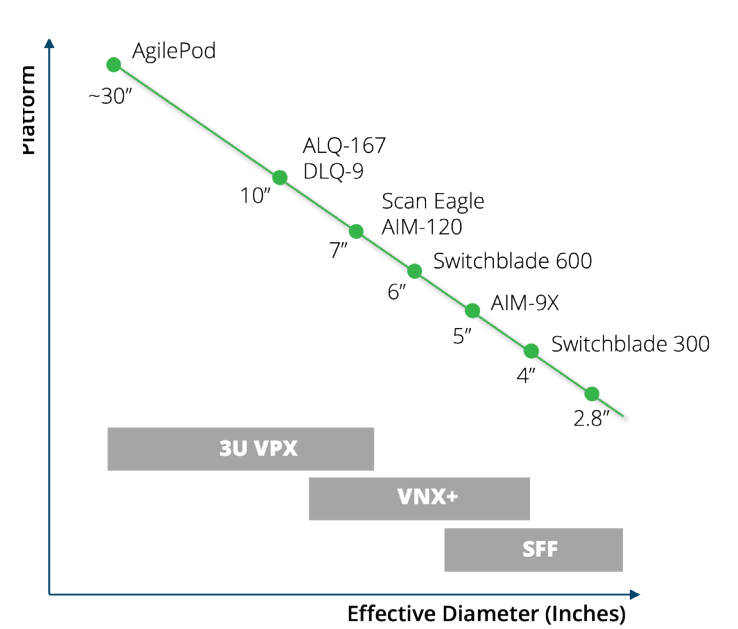

Adapted from Samtec VNX+ introduction material

EW Pods, UAS Payloads

The same G40-based VITA 90 approach is also well suited for EW pods and UAS payloads, where low SWaP and mission adaptability are both essential. With transmit and receive capability, four DF channels, and support for applications such as DeepSig's OmniSIG and 3dB Labs' Sceptre, it provides a compact SDR foundation for airborne EW, sensing, and signal exploitation.

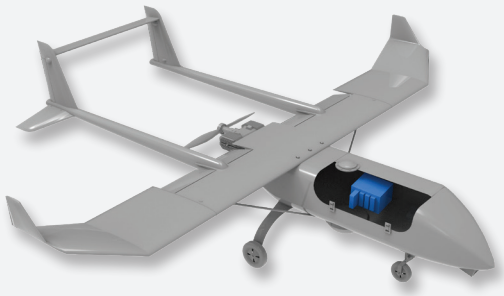

Dismount

For dismounted operations, a G40-based VITA 90 RF payload can extend advanced RF capability into modular man-pack systems. Publicized architectures using VNX+ modules show how payload elements can slot into a purpose-built pack spine or skeleton, creating scalable dismount solutions for expeditionary EW, sensing, and signal exploitation.

Other Examples

- Autonomous ground vehicles
- Edge compute & networked sensor nodes for harsh environments.
- Small-form-factor avionics and weapon-adjacent systems
- Test and measurement

The Epiq Family of Products

The VNX+ Development Platform closely mirrors the Matchstiq G40 in architecture and RF parameters. The Matchstiq X40 also presents a useful comparison as it fields the same GPU package internally but offers more Instantaneous bandwidth in exchange for a slightly larger package and more power consumption. Note that the X40 also has a model covering 18 GHz. Finally, the Matchstiq Z4 is not equipped with a GPU but is ideal for applications where four coherent channels and low SWaP are critical. The full Epiq SDR/ Tuner product range is available in the comparison table here.

Product	**VNX+ Development Platform**	**Matchstiq G40**	**Matchstiq X40, 6 GHz Model**	**Matchstiq Z4**
Description	Compact GPU-enabled 4 Channel 6 GHz SDR	Compact GPU-enabled 4 Channel 6 GHz SDR	Compact GPU-enabled 4 Channel 6 GHz SDR	Compact 4 Channel 6 GHz SDR
Output	Digital			
Max Channels Rx/ Tx	4/ 4	4/ 4	4/ 2	4/ 4
Frequency Range	10 MHz - 6 GHz		1 MHz - 6 GHz	10 MHz - 6 GHz
IBW Max/ Ch.	50 MHz		450 MHz	50 MHz
SFDR Typ.	75 dB			70 dB
CPU?	Yes			
GPU?	Yes			-
Typ. Power Consumption	40 W	30 W	50 W	20
Interface e.g.	Ethernet, etc.			USB

Maximum number of Rx, Tx channels, often not simultaneously. SFDR = Spurious Free Dynamic Range. IBW = Instantaneous Bandwidth. Interface example, often others present also.

VNX+ Development Platform Physical Views

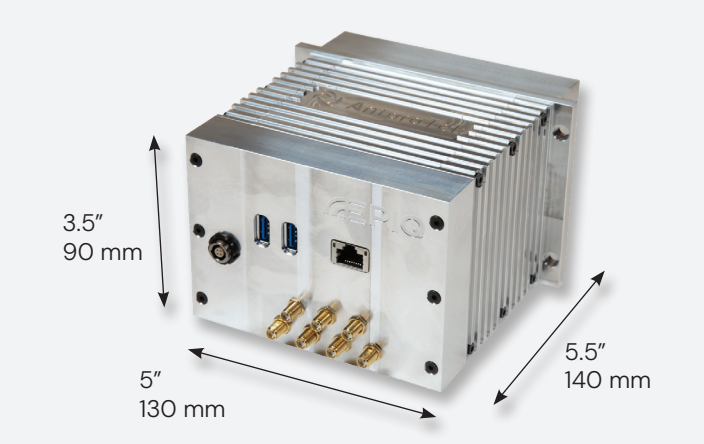

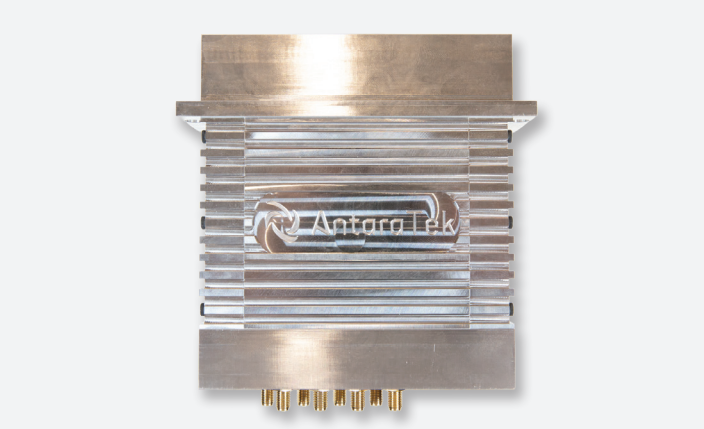

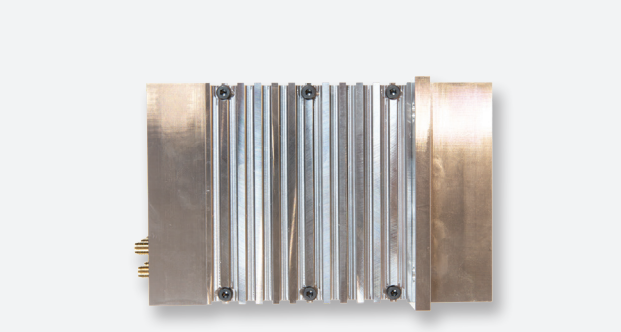

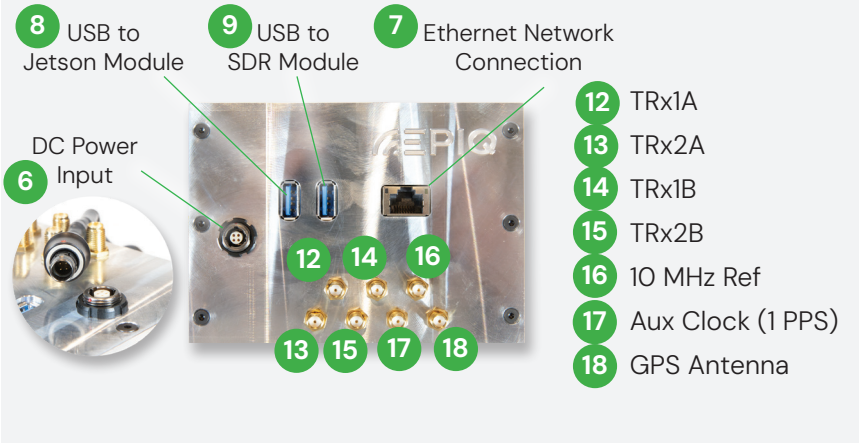

Ordering

VNX+ Development Platform PDK Kit

The kit includes the following hardware:

- VITA 90 3-slot development chassis, which includes taraBP VNX3030 backplane
- taraPS VNX4022 EPS Module - VITA 90 power supply module
- taraComp VNX4032 SBC Module - VITA 90 Nvidia Orin NX 16G SBC Module
- Epiq VNX400 - 4 channel, 6 GHz VITA 90 SDR module
- Power supply brick with US-style 120V power cord

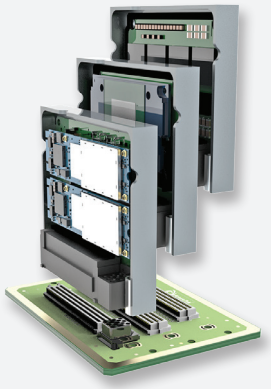

(illustration only)

Brick and Standard
120V Cable

AntaraTek website: antaratek.com
AntaraTek information: info@antarateknik.com

Specifications subject to change without notice.

Epiq Solutions exports its products strictly in accordance with all US Export Control laws and regulations which shall apply to any purchase or order.

ABOUT EPIQ

Epiq Solutions develops high performance tools for engineering teams and government-focused organizations requiring situational awareness and detailed insight into their RF environments in order to identify and act against wireless threats.

12th June, 2026

www.epiqsolutions.com
sales@epiqSolutions.com
+1 847 598 0218

3740 Industrial Ave,
Rolling Meadows, IL 60008, USA
© 2026